Measurement Technology and Uncertainty Analysis – E7021E

Johan Carlson

Office: A3205

E-mail: johanc@ltu.se

Course web page:
http://staff.www.ltu.se/∼johanc/E7021E/

General course information

Course evaluation comments (2009)

- Even for short (1 hour) lectures, a five minute break would be nice.
- More theory!
- Good labs (more labs!)
- Good to write individual lab reports.
- The exam problems were harder than the recommended exercises. Not good!
- To much slides → students passive.

General course information

Course evaluation, teacher's comments

- We will now always take a five minute break halfway through the lecture!
- Some wanted more theory, some wanted more labs. Conclusion: The course is fairly balanced as is. No major changes.
- Most exam problems came from the list of recommended exercises, some modified slightly, others more connected to the labs. Conclusion: I do not agree, BUT since the course was new last year, no old exams were available. Now there are some. This should simplify things.
- Will try to balance slides with examples on whiteboard.
- Will change labs slightly, so that you can prepare more at home. This way, time in the lab will be spent on practical things more than on MATLAB programming.

General course information

Personnel

- All teaching and lab work: Johan Carlson.

Lab work

- Lab 1: Navigation using a 2-axis accelerometer. Written report.
- Lab 2: Deflection bridge / strain gauge. Written report.
- Lab 3: Temperature measurement. Written report.
- Lab 4: MATLAB exercise on empirical model building and parameter estimation. Written report.

The lab instructions and deadline information will be posted on the course web page.

Reports should be submitted in Fronter. There's a room for E7021E.

General course information (cont'd...)

Lab work

- The lab A1505–A1506 has been booked for all lab work, including the MATLAB exercise. However, only labs 1, 2, and 3 require the special hardware in A1505–A1506.
- It is very important that you show up prepared and on time for your labs. If anyone has a problem, let me know in due time and we will try to work out some solution.
- The lab deadlines (see web page) are strict. Any delay that has not been approved by me *in advance* automatically means that you fail the lab course. The labs are mandatory, so don't let that happen.

General course information (cont'd...)

Course literature

- John M. Bentley, *Principles of Measurement Systems*, 4th edition, Pearson Education, 2005.
- Johan E. Carlson, *Introduction to Empirical Model Building and Parameter Estimation*, Luleå University of Technology, 2009–2010.

Examination

- The requirements of the mandatory lab work must be fulfilled. This means theoretical homework problems and lab reports. The practical parts of the labs are to be performed in pairs, but homework problems and written reports are individual.
- Written exam.

General course information (cont'd...)

- At each lecture, I will leave time for questions. Please bring questions to class, so that everyone can hear.
- If you email me questions, use the course code (E7021E) in the subject. Some questions will be answered directly, others will be answered in class.
- I will post "office hours" when I will be available for answering questions. Please respect these times.

General course information (cont'd...)

If you feel uncomfortable asking questions in English, ask me in Swedish and I'll translate before answering.

General course information (cont'd...)

What I expect you to know already

- Fundamentals of mathematical analysis.
- Basic mathematical statistics.
- Circuit theory.

Any problems with this?

Introduction

The course covers three aspects of measurement systems:

- **Part I: General principles**
  - Purpose, structure, and elements of measurement systems.
  - General characteristics (range, span, non-linearities, sensitivity, etc).
  - Statistical characteristics (accuracy, repeatability, tolerance, etc).
- **Part II: Elements of measurement systems**
  - Sensing elements.
  - Signal conditioning elements.
  - Signal processing elements and software.
  - Data presentation elements.

Introduction (cont'd...)

- **Part III: Specialized measurement systems**
  - Flow measurement systems.
  - Optical measurement systems.
  - Ultrasonics measurement systems.
  - Gas chromatography.
  - etc...

Purpose and definitions

The purpose of a measurement system is to link the observer to a process which generates information.

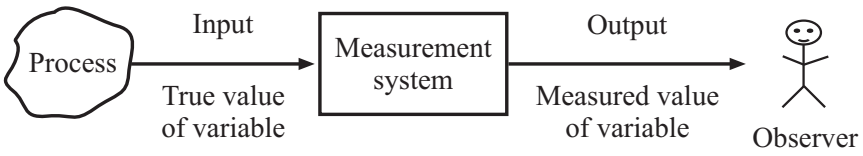

Purpose and definitions (cont'd...)

Definitions

- **Process:** A system which generates **information**, e.g. a chemical reactor, a car, a human heart, or a weather system.
- **Observer:** A person (or another system) that needs the information, e.g. a plant operator, a driver (or engine control system), or a nurse.
- **Measurement system:** A system that measures information carrying quantities, processes them, and presents them to the observer.

Structure of measurement systems

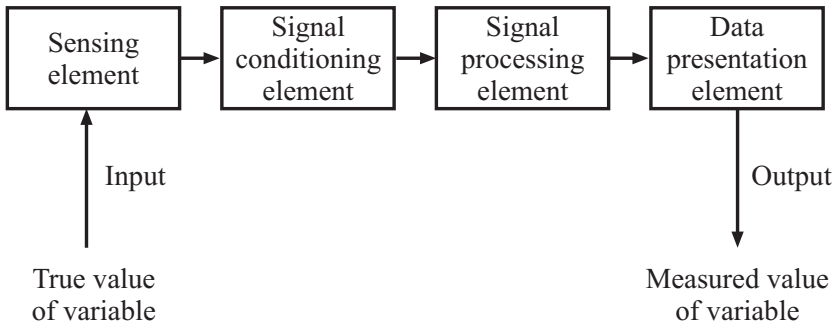

Structure of measurement systems (cont'd)

Sensing elements

- In contact with the process and gives output that depends on the variable(s) to be measured.
- Thermocouple – voltage depends on temperature.
- Strain gauge – resistance depends on mechanical strain.
- Orifice plate – pressure drop depends on flow rate.
- Ultrasonic transducer – electrical output depends on mechanical forces (vibrations) acting on the surface of the transducer.

Some sensing elements (sensors) depend directly on the physical variable of interest, while others have a more complex connection to the underlying mechanisms.

Structure of measurement systems (cont'd)

Signal conditioning elements

- Converts sensor outputs to more suitable forms.
- Deflection bridge – converts impedance changes to voltage changes.
- Amplifier – amplifies millivolts to volts, for example.
- Oscillator – converts impedance changes to variable frequency voltage.

Structure of measurement systems (cont'd)

Signal processing elements

- Analog-to-Digital converter (ADC) – samples a continuous voltage to a digital signal for input to a computer, micro processor (μP), DSP, etc.
- Computer, μP, DSP – calculates the values of measured variables given digital input.

The signal processing elements can also combine values from multiple sensors in order to calculate some higher-level quantity.

System characteristics

We differ between two types of characteristics:

- **Systematic characteristics** – those that can be quantified by mathematical means.
- **Statistical characteristics** – variations over time of the output of an element.

Systematic characteristics

- **Range** – Input and output ranges are specified by the minimum and maximum values of input and output variables, denoted I_{MIN}, I_{MAX}, O_{MIN}, and O_{MAX}.
- **Span** – the maximum variation of inputs and outputs, i.e. $I_{\text{MAX}} - I_{\text{MIN}}$ and $O_{\text{MAX}} - O_{\text{MIN}}$
- **Ideal straight line** – The input-output relationship of the element can be described by the straight-line equation, i.e.

$$O(I) = K \cdot I + a.$$

Systematic characteristics (cont'd...)

- **Non-linearity** – If the relationship between the input and output does not obey the straight-line equation, the element is said to be non-linear. The non-linearity is defined as the deviation from this line, i.e.

$$N(I) = O(I) - (K \cdot I + a).$$

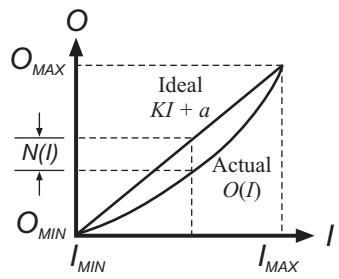

Systematic characteristics (cont'd...)

- **Sensitivity** – The change in output ΔO caused by a unit change ΔI in input I. As $\Delta I \to 0$, this becomes dO/dI, that is, the derivative of the output with respect to the input.
- **Environmental effects** – In general, the output O does not only depend on the input I but also on environmental inputs such as temperature, humidity, pressure, supply voltage, etc. The input-output relation must be adjusted to correct for these effects as

$$O = KI + a + N(I) + K_M I_M I + K_I I_I,$$

where I_M and I_I are called *modifying* and *interfering* input, respectively, and K_M and K_I are the corresponding coupling coefficients..

Systematic characteristics (cont'd...)

- **Hysteresis** – For a given value of I, the output O may differ depending on whether I is increasing or decreasing. This is known as the hysteresis, $H(I)$, defined as

$$H(I) = O(I)_{I\downarrow} - O(I)_{I\uparrow}.$$

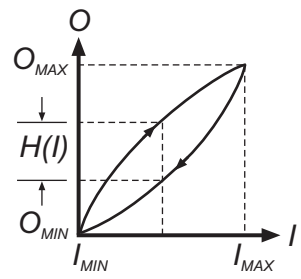

Systematic characteristics (cont'd...)

- **Resolution** – Defined as the largest change in I that can occur without any corresponding change in O.

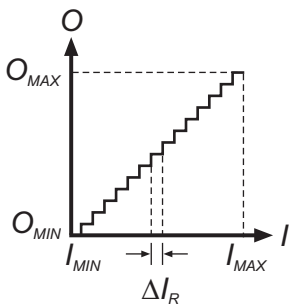

Systematic characteristics (cont'd...)

- **Wear and ageing** – Effects that cause the element's characteristics to change with time.
- **Error bands** – The effects of non-linearity, hysteresis, and resolution are often small, and instead of modeling them individually, the total performance of the element is given by an *error band*.

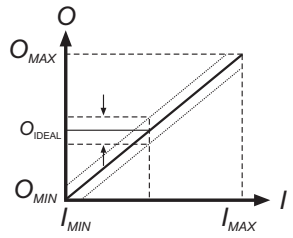

Systematic characteristics (cont'd...)

Generalized model of a system element

Neglecting hysteresis and resolution effects, the output can be modeled as

$$O = KI + a + N(I) + K_M I_M I + K_I I_I,$$

where I_M and I_I are modifying and interfering inputs, respectively, to compensate for environmental effects.

Systematic characteristics (cont'd...)

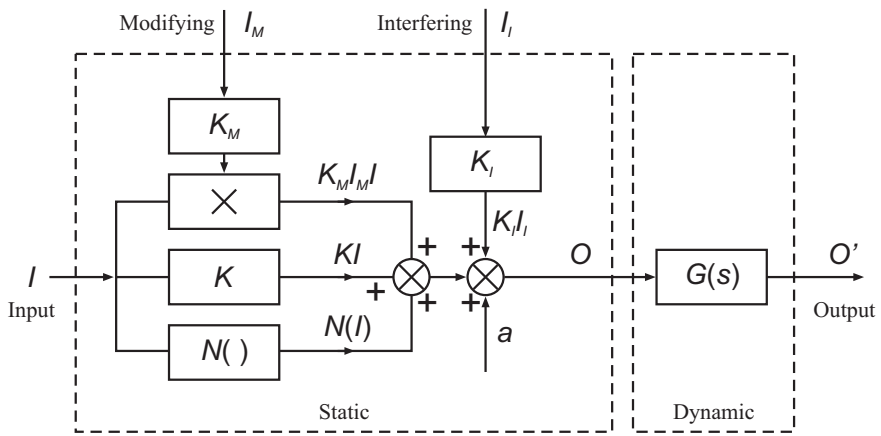

Statistical characteristics

Statistical characteristics can not be described by an exact mathematical relationship, but have to quantified in terms of probabilities and probability density functions.

Random variations in the output of an element affects:

- **Accuracy** – The difference between the true value and the measured value.
- **Repeatability** – Variance of measured values.

Why statistics?

Let's start with a simple example of things that can go wrong.

- Two groups measure the voltage across a resistor and the current through it, using two different sets of measurement equipment.
- The task is to estimate the unknown resistance.

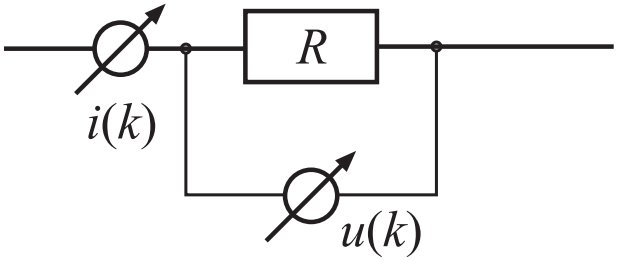

Why statistics (cont'd...)?

Given N measurements, we have three ways of calculating the resistance:

$$\widehat{R}_{SA} = \frac{1}{N}\sum_{k=1}^{N}\frac{u(k)}{i(k)}$$

$$\widehat{R}_{LS} = \frac{\frac{1}{N}\sum_{k=1}^{N} u(k)\,i(k)}{\frac{1}{N}\sum_{k=1}^{N} i^2(k)}$$

$$\widehat{R}_{EV} = \frac{\frac{1}{N}\sum_{k=1}^{N} u(k)}{\frac{1}{N}\sum_{k=1}^{N} i(k)}$$

Note that, for noise-free measurements, all methods give the same (correct) value of R.

Why statistics (cont'd...)?

Assume both group made $N = 10000$ noisy measurements (the plots showing the first 100), this could look like:

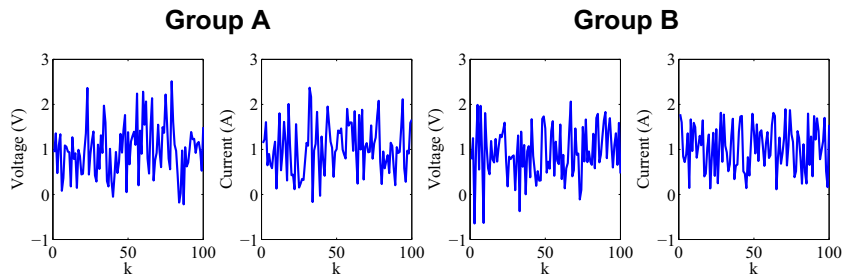

Why statistics (cont'd...)?

Using the three different methods, the two groups obtained the following results:

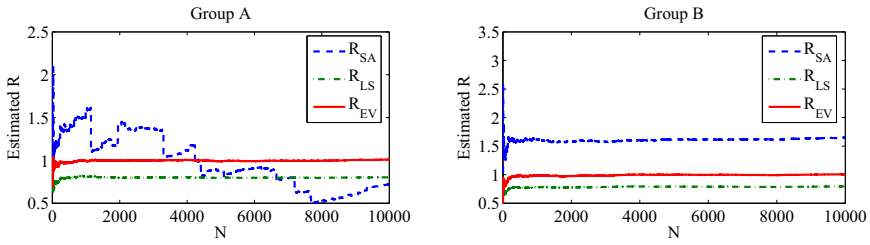

Why statistics (cont'd...)?

Some comments

- All three methods give different results as N increases.
- The R_{SA} estimate for Group A is very strange and does not appear to converge towards a constant value as N increases.
- The noise had zero mean.
- (Both groups used the same software).

Conclusion: At least two of the three methods give the wrong estimate.

The answer is to be found in the noise. Let's look at the data again...

Why statistics (cont'd...)?

Distribution of the current measurements for Group A and B, respectively:

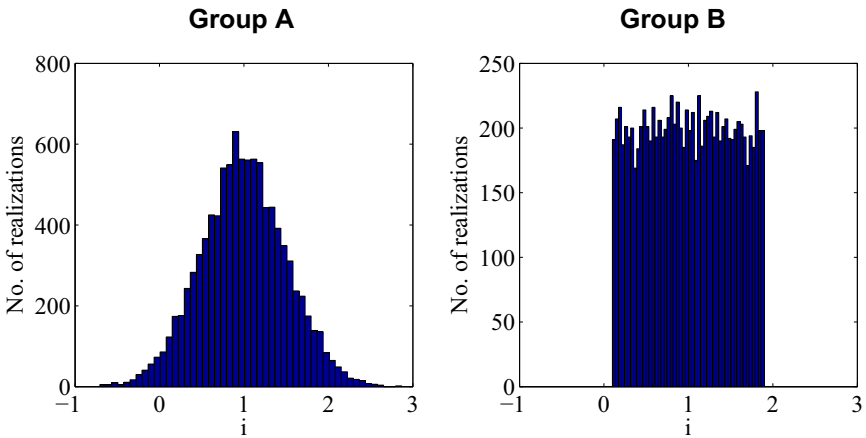

Why statistics (cont'd...)?

A few comments

- On average (i.e. the mean values) of all measurements are the true values, $u = 1$ and $i = 1$.
- For Group A, the noise in the current measurements sometimes results in measurements close to zero.
- The mean value of $i^2(k)$ is not 1, because squaring zero mean Gaussian (or uniform) noise results in a skew distribution with non-zero mean.

Why statistics (cont'd...)?

Let's return to the estimators:

$$\widehat{R}_{SA} = \frac{1}{N}\sum_{k=1}^{N}\frac{u(k)}{i(k)}$$

$$\widehat{R}_{LS} = \frac{\frac{1}{N}\sum_{k=1}^{N} u(k)\,i(k)}{\frac{1}{N}\sum_{k=1}^{N} i^2(k)}$$

$$\widehat{R}_{EV} = \frac{\frac{1}{N}\sum_{k=1}^{N} u(k)}{\frac{1}{N}\sum_{k=1}^{N} i(k)}$$

Values of $i(k)$ close to zero will cause large errors in $\widehat{R}_{SA}$. The noise of $i(k)$ in $\widehat{R}_{LS}$ will cause the estimate to be biased. $\widehat{R}_{EV}$ is the optimal estimator in this case.

Why statistics (cont'd...)?

What was all this about?

- Noise in measurements affects *variance* of the estimated properties.
- The estimators affect the *accuracy* of the estimates, e.g. $E\{\widehat{R}\} - R$.
- The characteristics of the noise affect how estimators should be designed.

Conclusion: We need some statistical knowledge in order to properly *design* a measurement system. We also need statistics to *analyze* measured properties.

Summary

- Definitions of measurement system elements.
  - Sensing elements.
  - Signal conditioning elements.
  - Signal processing elements.
  - Data presentation elements.
- Survey of systematic and static measurement system characteristics.
  - Range, Span, Resolution.
  - Non-linearities.
  - Hysteresis and environmental effects.

Next lecture

- Statistical characteristics.
  - Accuracy.
  - Repeatability.
  - Tolerance.
- Uncertainty analysis.

Recommended exercises

- 2.1 – 2.4.
- 2.7 – 2.17.
- Refresh your knowledge of MATLAB, for example by solving some of the exercises and plotting results.