LULEÅ UNIVERSITY OF TECHNOLOGY
Dept. of Computer Science and Electrical Engineering
EISLAB

Course	SME101
Date	2005-12-20
Time	9.00–13.00

Exam in: **Measurement Systems**
Teacher: Johan Carlson, Ext. (ankn.). 2517
Problems: 5 (5 points per problem)
Tools allowed: BETA (Mathematics Handbook), Physics handbook, Language dictionary, calculator
Text book: Principles of Measurement Systems, by John Bentley

---

1. A thermocouple sensor has an electromotive force (e.m.f.)

$$E(T) = 38.74T + 3.319 \times 10^{-2}T^2 + 2.071 \times 10^{-4}T^3 - 2.195 \times 10^{-6}T^4,$$

for the range 0 to 400 °C. For $T = 0$ °C, $E(T) = 0\ \mu$V and for $T = 400$ °C, $E(T) = 20\,869\ \mu$V.

   (a) Calculate the expression for the ideal straight line relationship, $E(T) = K \cdot T$. (1p)

   (b) Determine the sensitivity of the sensor. (1p)

   (c) Determine the maximum non-linearity of the system, as function of the full-scale (400 °C). (3p)

2. Two strain gauges are bonded onto a cantilever as shown in the figure below. Given that the gauges are placed halfway along the cantilever and the cantilever is subject to a downward force F. Use the tabulated data below to:

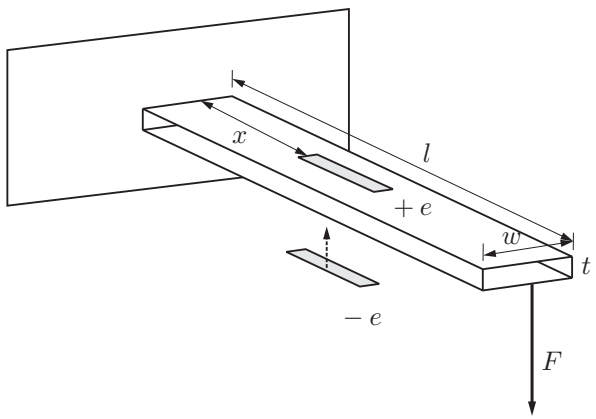

Cantilever data		*Strain gauge data*	
Length	$l = 25$ cm	Gauge factor	$G = 2.1$
Width	$w = 6$ cm	Unstrained resistance	$R_0 = 120\ \Omega$
Thickness	$t = 3$ mm		
Young's modulus	$E = 70 \times 10^9$ Pa		

(a) Calculate the resistance of each strain gauge for $F = 0.5\ N$ and $F = 10\ N$. (2p)

(b) Design a resistive deflection bridge suitable for force measurements in the interval in (a). Motivate your design choices clearly. (3p)

3. A resistive sensing element with resistance R_p is connected to a deflection bridge according to the figure below. The supply voltage was measured 10 times and stored in the vector

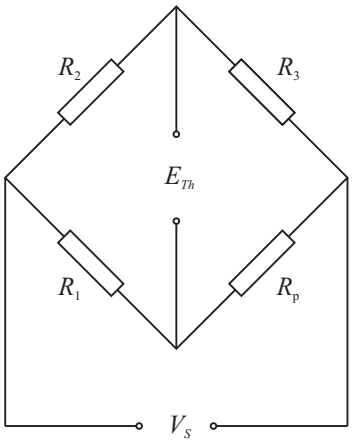

$$\mathbf{V}_s = \begin{bmatrix} 5.02 & 4.99 & 5.0 & 4.98 & 5.01 & 4.99 & 5.01 & 5.0 & 5.01 & 4.98 \end{bmatrix}^T.$$

Assume that $\sigma_{R_p} = 0.1$ and $\sigma_{R_1} = \sigma_{R_2} = \sigma_{R_3} = 0.05$, and that $\overline{R}_1 = \overline{R}_2 = \overline{R}_3 = 200\ \Omega$.

(a) Estimate the mean $\overline{V}_s$ and the standard deviation σ_{V_s} of the supply voltage. (1p)

(b) Derive an expression for the total variance, σ_E^2 of E, as a function of the resistance R_p, where (3p)

$$E = V_s \left(\frac{R_1}{R_1 + R_p} - \frac{R_2}{R_2 + R_3} \right).$$

(c) Looking at a $2\sigma_E$, how much of the total variation does the supply voltage variation account for, when $\overline{R}_p = 150\ \Omega$? (1p)

4. A temperature measurement system is given in the figure below, with transfer functions of the individual elements as in the figure.

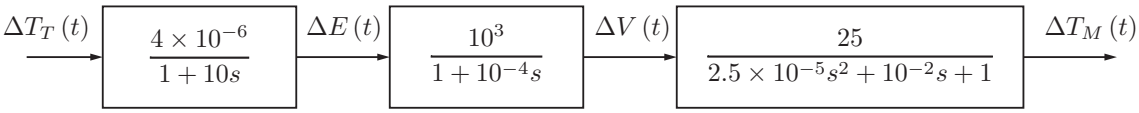

(a) Calculate the dynamic error $E(T)$ of the system. Which element in the system is the dominant cause of this error? (3p)

(b) Assume that the input temperature is varying as

$$T_T(t) = 5\sin(10^{-2}t) + 2\sin(50t).$$

What is the output of the system? Explain this behavior. (2p)

5. An ultrasonic Doppler flowmeter is used to measure the flowrate of particles suspended in a liquid. The setup is shown in the figure below. The transmitting transducer is transmitting a continuous sound wave at $f = 1$ MHz and the velocity of the particles is in the range of 5 to 20 m/s. The angle $\theta = 30°$, and the speed of sound in the fluid is $c = 1485$ m/s.

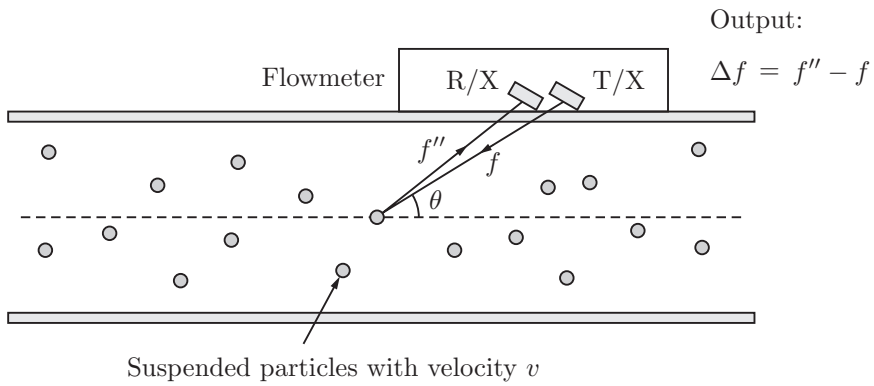

(a) Explain the working principle of this flowmeter and give an approximate expression for the flow velocity, v, in terms of the Doppler shift Δf. You may assume that only the frequency of the Doppler signal is used, not the amplitude. (1p)

Hint: You may also assume that v/c is small.

(b) What is the minimum sampling frequency required for a analog-to-digital converter (ADC) recording Δf? (1p)

(c) Mistakes when installing the flowmeter causes the angle to vary randomly around $\theta = 30°$, so that the true angle is Gaussian distributed with mean $\overline{\theta} = 30°$ and standard deviation $\sigma_\theta = 1°$. Determine a 95 % confidence interval (corresponding to 2σ) for the flow velocity, v. What is the maximum error due to this misalignment as percentage of the maximum flow velocity? (3p)